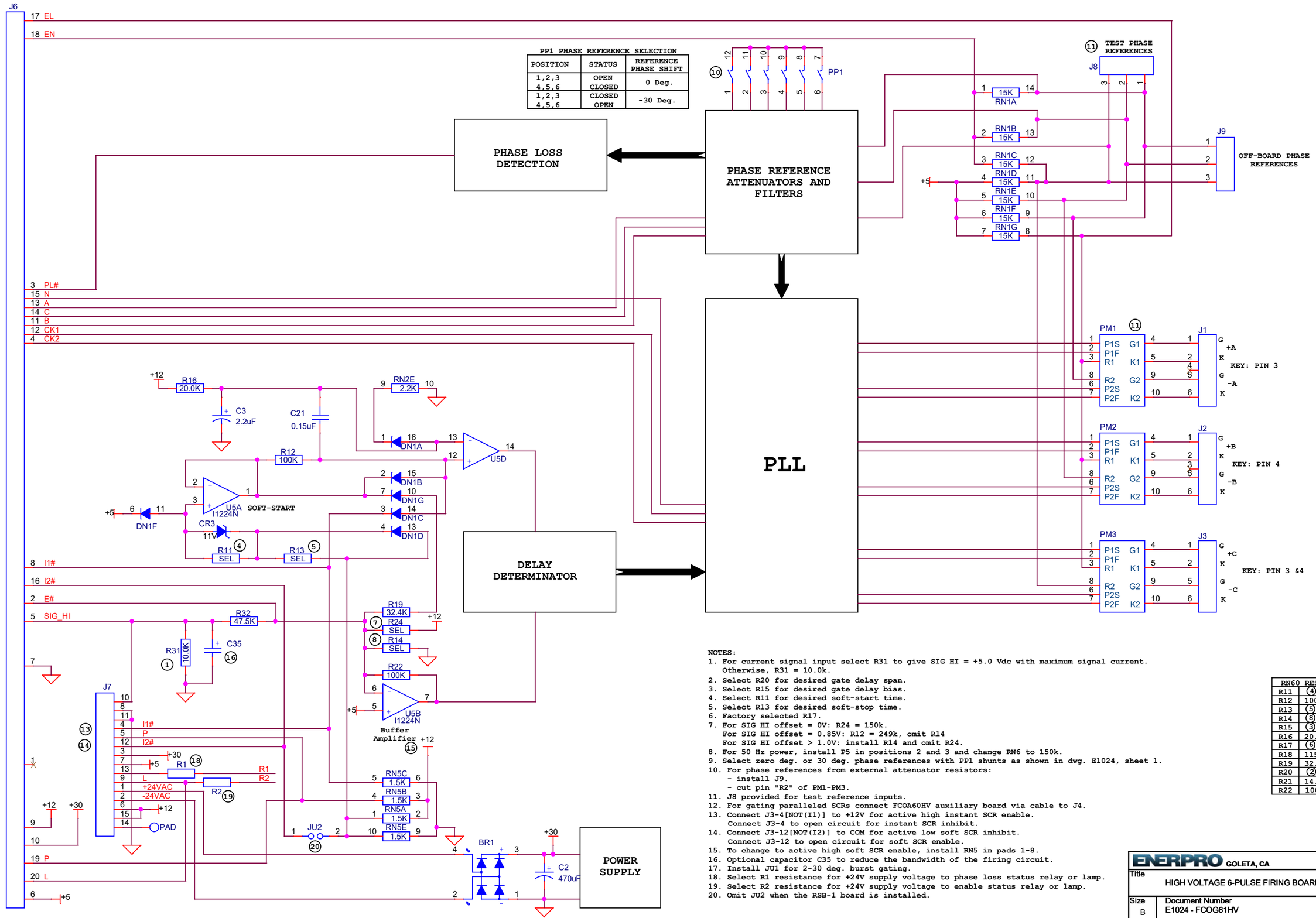

NOTES:

1. For current signal input select R31 to give SIG HI = +5.0 Vdc with maximum signal current. Otherwise, R31 = 10.0k.
2. Select R20 for desired gate delay span.
3. Select R15 for desired gate delay bias.
4. Select R11 for desired soft-start time.
5. Select R13 for desired soft-stop time.
6. Factory selected R17.
7. For SIG HI offset = 0V: R24 = 150k.
   For SIG HI offset = 0.85V: R12 = 249k, omit R14
   For SIG HI offset > 1.0V: install R14 and omit R24.
8. For 50 Hz power, install P5 in positions 2 and 3 and change RN6 to 150k.
9. Select zero deg. or 30 deg. phase references with PP1 shunts as shown in dwg. E1024, sheet 1.
10. For phase references from external attenuator resistors:
    - install J9.
    - cut pin "R2" of PM1-PM3.
11. J8 provided for test reference inputs.
12. For gating paralleled SCRs connect FCOA60HV auxiliary board via cable to J4.
13. Connect J3-4[NOT(I1)] to +12V for active high instant SCR enable.
    Connect J3-4 to open circuit for instant SCR inhibit.
14. Connect J3-12[NOT(I2)] to COM for active low soft SCR inhibit.
    Connect J3-12 to open circuit for soft SCR enable.
15. To change to active high soft SCR enable, install RN5 in pads 1-8.
16. Optional capacitor C35 to reduce the bandwidth of the firing circuit.
17. Install JU1 for 2-30 deg. burst gating.
18. Select R1 resistance for +24V supply voltage to phase loss status relay or lamp.
19. Select R2 resistance for +24V supply voltage to enable status relay or lamp.
20. Omit JU2 when the RSB-1 board is installed.

RN60 RESISTORS (KOhms)			
R11	4	R23	61.9
R12	100	R24	7
R13	5	R25	30.1
R14	8	R26	2.67
R15	3	R27	61.9
R16	20.0	R28	100
R17	6	R29	47.5
R18	115	R30	2.00
R19	32.4	R31	10.0 1
R20	2	R32	47.5
R21	14.0	R33	42.2
R22	100		

ENERPRO GOLETA, CA

Title: HIGH VOLTAGE 6-PULSE FIRING BOARD

Size: B | Document Number: E1024 - FCOG61HV | Rev: A

Date: Wednesday, April 03, 2019 | Sheet 1 of 2